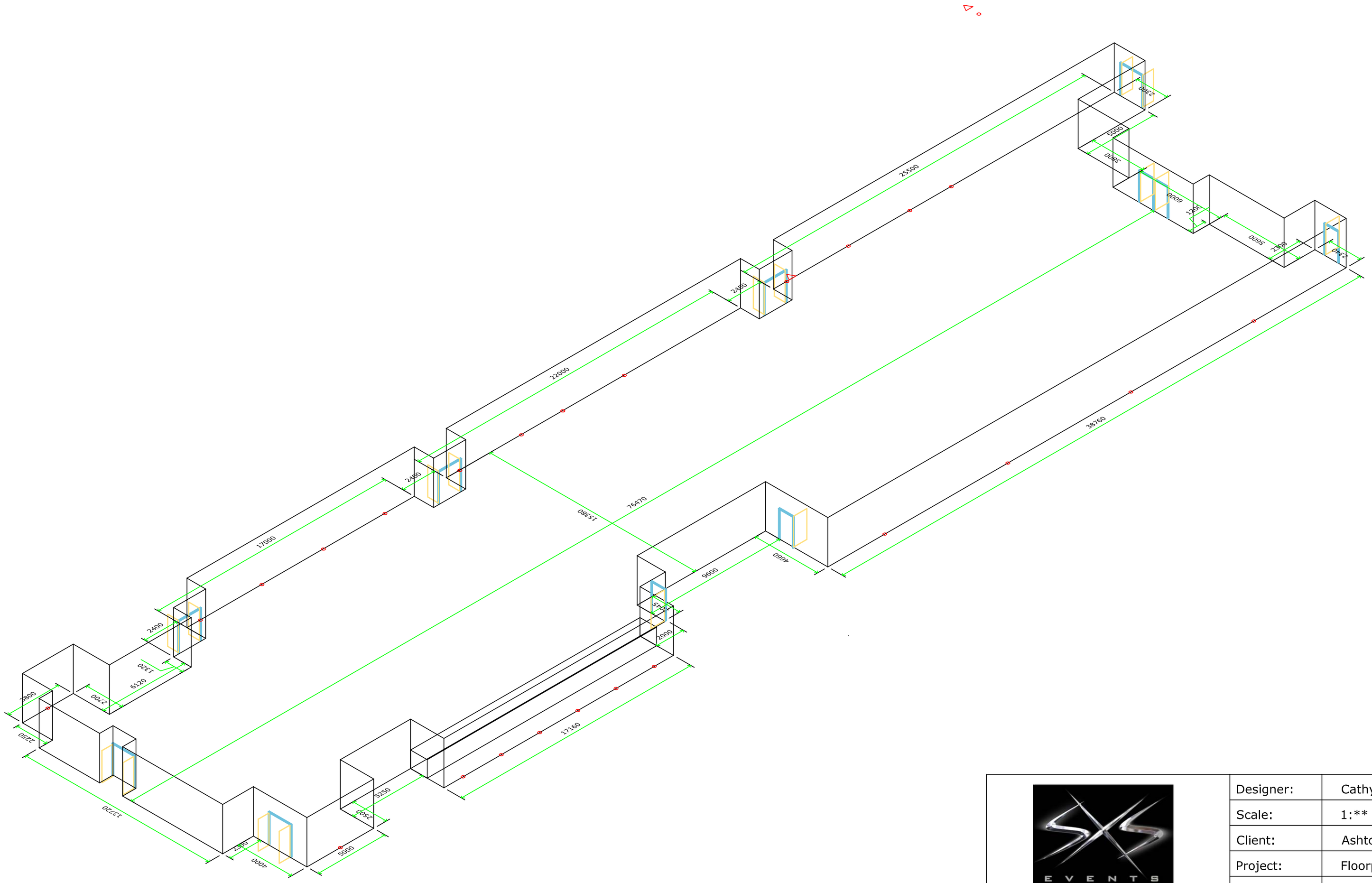

	Designer:	Cathy Shay
	Scale:	1:** @ A2
	Client:	Ashton Gate
	Project:	Floorplan
	Contact Nos:	0870 080 2342
Disclaimer: Please note that this drawing is a representation only. All measurements should be checked prior to installation. Copyright of SXS Event Production Services Ltd	Address:	23 Bonville Road Bristol BS4 5QH